PROPRIETARY NOTICE: This document contains proprietary information of AeroAntenna Technology, Inc. (AAT). Neither the document nor said proprietary information shall be published, reproduced, copied, disclosed or used for any purpose other than consideration of this document without the express written permission of a duly authorized representative of said AeroAntenna Technology, Inc.

REVISIONS			
SYM	DESCRIPTION	DATE	APPROVED
A	RELEASED TO PRODUCTION PER ECO 9137	01/28/10	

AT1675-382

NOTES: UNLESS OTHERWISE SPECIFIED.

1. LABEL SIZE, SHAPE, CONTENTS AND LOCATION SUBJECT TO CHANGE WITHOUT NOTICE.
2. LOGO OPTIONAL.
3. TOLERANCES: .XX ± .03
   .XXX ± .010

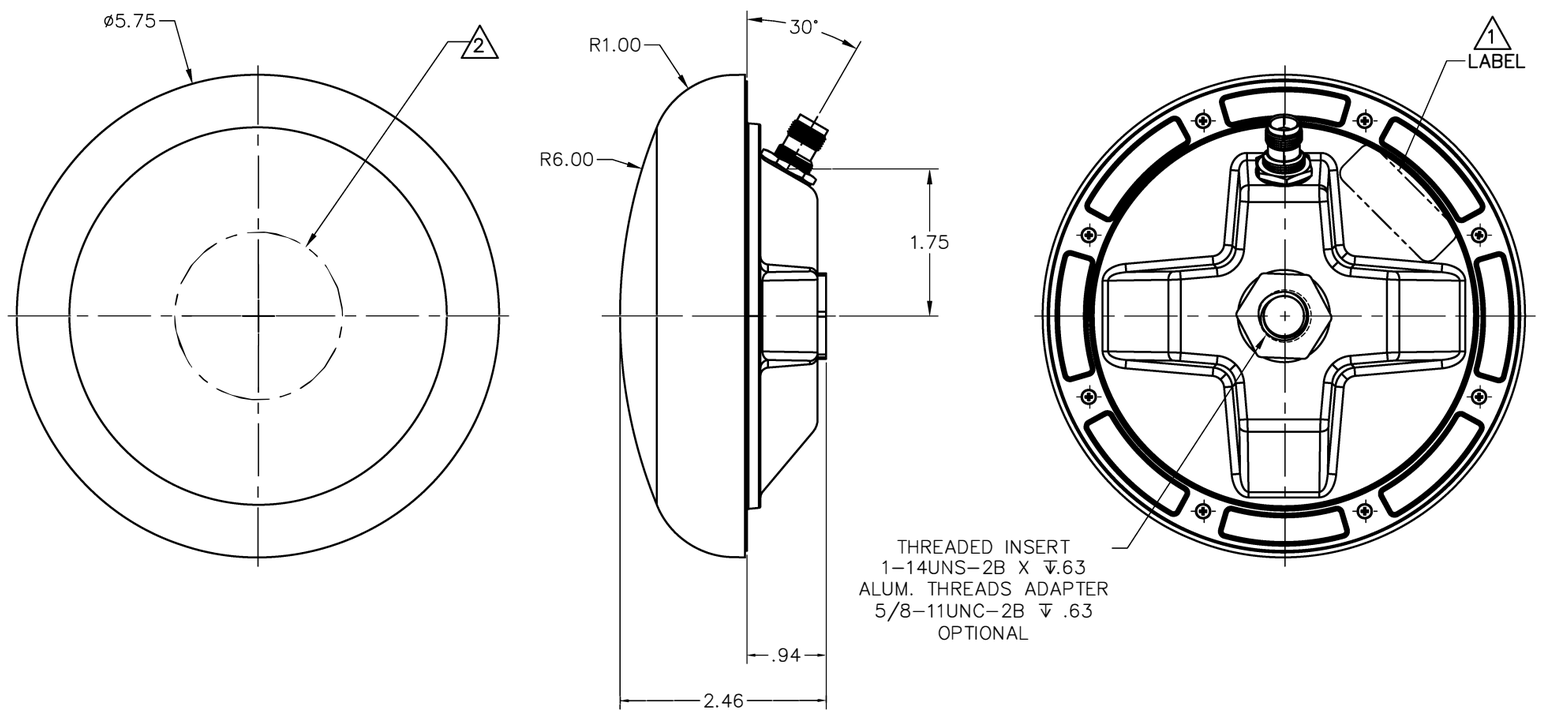

SPECIFICATION:

FREQUENCY: 1525–1615 MHz L1, Glonass (G1), L–Band
1164–1260 MHz L2, Glonass (G2), L5 (Galileo, E1, E5a, E5b)

POLARIZATION: RIGHT HAND CIRCULAR
AXIAL RATIO: 3 dB MAX @ BORESIGHT
RADIATION COVERAGE:
6.0 dBic 0° = 0°
−2.0 dBic 0° < θ < 75°
−3.0 dBic 75° ≤ θ < 80°
−4.0 dBic 80° ≤ θ < 85°
−5.0 dBic HORIZON

APPROVED DOCUMENT 03/04/10

AMPLIFIER:
NOISE FIGURE: 2.6 dB MAX
IMPEDANCE: 50 OHMS
VSWR: ≤2.0:1

POWER HANDLING: 1 WATT
FINISH: UV RESISTANT WHITE RADOME WITH BLACK ALUMINIUM BASE
WEIGHT: 1.1 LBS
OPERATING TEMP: −55°C TO +85°C
DESIGNED TO: D0–160D
ENV CAT: E1–ABB[CLMY]XSFDFSZAAACPH[A3][2A]CA

PART NO. DESIGNATION:

AT1675–382W–TNCF–000–RG–38–NM–R

COLOR
W = WHITE
* S = SMOKE GRAY
* O = OLIVE DRAB

CONNECTOR
* SMAF = SMA FEMALE
* BNCM = BNC MALE
TNCF = TNC FEMALE

CABLE LENGTH
* 000 = IN INCHES

ROHS COMPLIANT
R = ROHS COMPLIANT

MAGNET
NM = NO MAGNET

GAIN (± 2 dB)
00 = PASSIVE
26 = 26 dB (40 mA)
39 = 39 dB (65 mA)
XX = OTHER

VOLTAGE
RG = 4.2 TO 15.0 VDC

* = OPTION NOT AVAILABLE WITH THIS MODEL

STANDARD MODEL= AT1675–382W–TNCF–000–RG–39–NM–R

DO NOT SCALE THIS DRAWING
REMOVE BURRS AND BREAK SHARP EDGES:
PART TO BE CLEAN AND OIL FREE
ALL DIMENSIONS ARE IN INCHES
DIMENSIONING & TOLERANCING PER ASME Y14.5M–1994
TOLERANCES:
~~.XX = ±.01~~ FRACT = ±1/32
~~.XXX = ±.005~~ ANG. = ±1/2°
SURFACE ROUGHNESS
MACHINED PARTS √63
MOLDED PARTS √32

HOLE DIA.	TOLERANCE
.0135 – .125	+.004 −.001
.126 – .250	+.005 −.001
.251 – .500	+.006 −.001
.501 – .750	+.008 −.001

NEXT ASSY

DRAWN	V. GRINEVICH	01/28/10
CHECKED		
ENGR		
MFG		
Q.A.		
APPROVED		
DRAWN IN	MCAD	

AeroAntenna Technology Inc
AS9100 CERTIFIED CO.

TITLE: GPS ANTENNA, GNSS

SIZE	CAGE CODE	DRAWING NO.	REV
B	OUVG2	AT1675–382	A

SCALE NONE | I:\CAD\AT1675\–382\AT1675–382_A | SHEET 1 OF 1

רח' אודם 14, ת.ד. 7042 פ"ת ▪ טל: 03-9243352 ▪ פקס: 03-9243358
www.hypertech.co.il ▪ sales@hypertech.co.il
היפר-טק מערכות